Outdoor monobloc air-water unit

LCP 52 - 314 kW

Total heat recovery multi-purpose unit | Multi-purpose unit - 2-pipe system | Multi-purpose unit - 4-pipe system | Scroll compressor | R-410A refrigerant | Cooling / Heating | Monobloc unit

PLUS

- Total heat recovery in two-pipe and four-pipe systems.
- High efficiency under part load conditions
- Production of chilled water up to an air temperature of 51 °C
- Smart Defrost System always able to guarantee continuity in operation.
- Built-in hydronic unit
- Access to the tax incentives provided for energy retrofitting

Heating, cooling, domestic hot water = one single system to meet all kinds of needs.

LCP multi-purpose units are air conditioning and domestic hot water (DHW) production units conceived for both residential and industrial use and designed to operate 24 hours a day. They cover a wide range of heating capacities, from 52 to 314 kW, guaranteeing a high thermodynamic efficiency and broad configurability, both in terms of accessories and cooling circuits.
All units of the LCP series, regardless of size, can be also made in a low-noise configuration "L", in which the compressors and compressor compartment are covered with sound-deadening material and the unit is specially dimensioned so as to be compatible with a reduced fan speed.
As for units with refrigerating capacity lower than 100 kW, LCP presents a solution with a double compressor divided into two independent thermodynamic circuits to always assure the unit operation.
As for units with cooling power higher than 100 kW, 4 compressors divided in two thermodynamic circuits are available in order to supply the unit power in four steps, perfectly adjusting it to the actual heat load of the system and to reduce inrush current.
LCP units can be coupled with both 2- and 4-pipe systems, the letter "P" indicates heat pump for 4-pipe systems and the letter "M" indicates multifunctional heat pump for 2-pipe systems.
In both versions, the machine uses the total heat recovery, when a request for contemporary production of cold water (cooling) and hot water (heating/DHW production) is needed.
The unit recovers the condensation heat of the cooling system that would otherwise be ejected into the atmosphere.

The total recovery LCP heat pumps have been designed for the cooling and the heating of the water destined to air-conditioning and domestic systems in residential, commercial or industrial buildings.

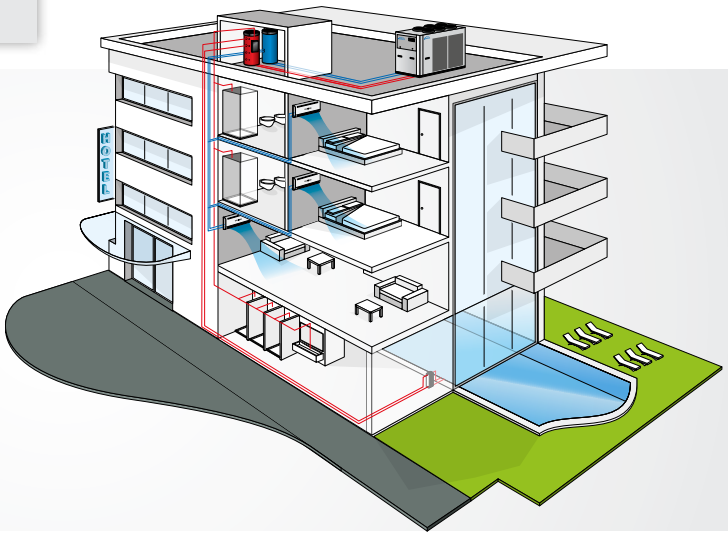

MAIN COMPONENTS

Refrigerating circuits

Thanks to the presence of two independent thermodynamic circuits, the LCP M is capable of producing hot water for heating while simultaneously carrying out a defrost cycle or guaranteeing the replenishment of domestic hot water.

Heat exchanger

Hydrophilic finned block heat exchangers are installed; these break down the drops of water into particles and reduce the obstruction of the space between one fin and another caused by ice build-up. Thanks to a lower surface tension, the water tends to slide and precipitate by gravity, preventing the formation of frost at low temperatures.

Fans

4/6/8-pole axial-type fans with airfoil-shaped blades made of hybrid plastic/aluminium material, statically and dynamically balanced in two planes, fitted with a protective grille and mounted with rubber vibration dampers placed in between.
Option to select the condensation pressure-switch control with variation of the air-flow rate through electronic switching operated fans, to operate in cooling mode at low temperatures (up to -15°C)

Compressors

The scroll compressor today represents the best solution in terms of reliability and efficiency in the range of capacities up to 200 kW per circuit and the best solution in terms of sound power emitted. The use of scroll compressors makes it possible to use low-viscosity oils which, compared to solutions with oil at a high viscosity level, reduce thermal resistance at the evaporator with increases in the evaporation temperature of over 1.5°C (more than a 5.5% gain in terms of EER) compared to alternative solutions.

Electronic microprocessor controller

LCP units are supplied with an Advanced microprocessor controller. In addition to the functions described below, this microprocessor offers the option of custom software features to ensure optimal satisfaction of all system requirements, including control of the unit with step-control or cascade logic.
As regards remote communication options, the controls are configured for a connection to advanced BMS systems.

AVAILABLE VERSIONS

LCP M - 2-pipe systems

Cooling

Heating

DHW production

Cooling + DHW

Operating modes available for an LCP M unit which interfaces with a 2-pipe system.
C1 Hydraulic circuit manages winter heating and summer air-conditioning while the C2 one is used for the production of DHW, ensuring this function 365 days per year.
In case of simultaneous production of cold (C1) and high-temperature water for domestic use (C2), the machine is able to recover all the condensation heat on the refrigerant for the production of DHW.

LCP P - 4-pipe systems

Cooling

Heating

Cooling + Heating

Operating modes available for an LCP P unit which interfaces with a 4-pipe air conditioning system.
In this kind of systems, it is possible to request air-conditioning and heating at the same time. For this reason, C1 and C2 hydraulic circuits respectively produce cold and hot water.
In case of simultaneous operation of C1 and C2 hydraulic circuits, the condensation heat of the cooling system is totally recovered for the production of hot water.

Operating modes of the LCP M version

Cooling

In the "Chiller" mode the LCP M multifunctional unit chills water to cool a room on the user side, dissipating the condensation heat in air by means of a finned block condenser.

Heating

In the "Heat Pump" mode the LCP M unit heats the water in the condenser to provide heating on the user side, absorbing the evaporative cooling capacity in air by means of a finned block heat exchanger.

Hot water production (for sanitary use-DHW)

In the "Production of High-temperature Hot Water for sanitary use (DHW)" mode the LCP M multifunctional unit heats water in the second condenser, absorbing the evaporative cooling capacity in air by means of a finned block heat exchanger.

Cooling and hot water production through total recovery

In the "Chiller + DHW" mode the LCP M multifunctional unit can produce chilled water with the simultaneous production of high-temperature hot water for sanitary use, thanks to total heat recovery.

Simultaneous

Hot water production (for example for sanitary use) simultaneously with heating

In the "Simultaneous DHW Production and Heating" mode the LCP M multifunctional unit heats water in parallel, optimally exploiting the complete independence of its thermodynamic circuits.
Capacity is equally divided between the two circuits.

Simultaneous

The solution to the problem of defrosting

During the wintertime period, especially with temperatures ranging between -3°C and +3°C, the high ambient relative humidity causes the formation of water condensation around the exchanger fins.
Since the exchanger is at a lower temperature than the outdoor air, the water in contact with it ends up hindering the heat exchange necessary for the system to work correctly.
A defrost cycle is a temporary reversal of the thermodynamic cycle which switches the unit into the summer mode and melts the ice present between fins.
This phase is obviously problematic, since the cooling cycle warms up the exchanger by drawing heat from the room that was previously being heated. The circuit that is defrosting will draw heat on the user side (that is, not on the DHW side) if the unit is LCP M, and will heat on the hot water user side if the unit is LCP P.

Separate defrosting

The LCP unit reduces this problem with the following technical innovations:

- The two thermodynamic circuits in the LCP M LCP P are completely independent and while one defrosts, the other circuit is able to ensure continuity in the unit's operation, with practically no thermal discomfort for the user.
- Hydrophilic coils are installed; these break down the drops of water into particles and reduce the obstruction of the space between one fin and another caused by ice build-up. Thanks to a lower surface tension, the water tends to slide and precipitate by gravity, preventing the formation of frost at low temperatures.
- The software which manages the defrost cycle minimizes the time it takes to complete it and only acts when it is really necessary. The fans are pushed to their maximum capacity at just the right time, that is, when the ice is no longer stuck to the fins, and mechanically ejects it from the heat exchanger.

CONFIGURATION

The models are completely configurable by selecting the version and the options. To the right is shown an example of configuration.

Version	Fields▶	1	2	3	4	5	6	7	8	9	10	11	12
LCP144PL		0	C	1	0	1	C	P	1	0	0	G	3

To verify the compatibility of the options, use the selection software or the price list.

AVAILABLE VERSIONS

2-pipe system versions

LCP..MS	Standard execution
LCP-ML	Low noise execution

4-pipe system versions

LCP..PS	Standard execution
LCP-PL	Low noise execution

CONFIGURATION OPTIONS

1 - POWER SUPPLY
- 0 400/3/50 + N
- 1 400/3/50 with transformer
- 2 400/3/50 + N + Circuit breakers
- 3 400/3/50 with transformer+ Circuit breakers

2 - CONTROL MICROPROCESSOR AND THERMAL EXPANSION VALVE
- C Programmable (LCD 8x22 display) + mechanical expansion valve

3 - WATER PUMP ON USER SIDE
- 0 Absent
- 1 Single pump
- 2 Uprated single pump
- 3 Dual pump for combined operation
- 4 Dual uprated pump for combined operation
- 5 Dual pump with timed rotation
- 6 Dual uprated pump with timed rotation

4 - BUFFER TANK
- 0 Absent
- S Buffer tank on user side
- R Buffer tank on recovery side

5 - WATER PUMP ON RECOVERY SIDE
- 0 Absent
- 1 Single pump
- 2 Uprated single pump
- 3 Dual pump for combined operation
- 4 Dual uprated pump for combined operation
- 5 Dual pump with timed rotation
- 6 Dual uprated pump with timed rotation

6 - AIR FLOW MODULATION
- C Condensation control with fans adjusted by potentiometer
- E Condensation control, "EC brushless" electronically controlled fans

7 - ANTIFREEZE KIT
- 0 Absent
- E Present, basic unit (heating element only on exchangers)
- P Present, unit with pump/s and expansion tank
- S Present, unit with pump/s, expansion tank and tank

8 - REMOTE COMMUNICATION
- 0 Absent
- 1 RS485 Serial board (Modbus or Carel protocol)
- 2 Lonworks serial board
- 3 GSM modem kit
- 4 Ethernet card (SNMP or BACNET protocol) + clock card
- 5 Ethernet card + clock card + supervision software

9 - HEAT EXCHANGER CONSTRUCTION ON REQUEST
- 0 Standard
- R Copper / copper exchangers
- C Cataphoresis
- B Fins pre-coated with epoxy paint

10 - PACKING
- 0 Standard
- 1 Wooden crate
- 2 Wooden case

11 - VIBRATION ISOLATION
- 0 Absent
- G Rubber vibration dampers at the base of the unit
- M Spring vibration dampers at the base of the unit

12 - REMOTE CONTROL
- 0 Absent
- 3 Remote display for programmable microprocessor

ACCESSORIES

- **A** Power factor correction capacitors
- **B** Soft-starter kit
- **C** ON/OFF status of the compressors
- **D** Four Victaulic couplings for quick water IN-OUT connection
- **E** Outdoor temperature probe for setpoint compensation
- **F** Pressure gauges
- **G** Regulating filter kit (solenoid and tap on the liquid line)
- **H** Normative reference other than "97/23/CE - PED"
- **I** Unit lifting kit
- **L** Finned heat exchanger protective grille
- **M** Metal filters for protecting finned heat exchanger

Rated technical data of models for 2-pipe systems + DHW

LCP MS		41	51	61	71	81	94	104	124
Power supply	V-ph-Hz	400-3N-50							
Cooling mode (1)									
Cooling capacity (E)	kW	51,4	56,2	67,3	73,8	82,5	102	111	134
Power input (E)	kW	16,2	18,3	20,8	23,4	27,0	32,8	37,0	44,1
EER (E)		3,18	3,08	3,24	3,15	3,05	3,11	3,00	3,04
ESEER (E)		3,58	3,67	3,69	3,72	3,74	4,14	4,29	3,82
Eurovent efficiency class		A	B	A	A	B	A	B	B
User side water flow	l/h	8874	9695	11616	12743	14227	17571	19157	23115
Water pressure drop (E)	kPa	29	34	34	41	32	37	43	45
Cooling mode + DHW (2)									
Cooling capacity	kW	50,6	55,8	65,8	72,8	83,6	101	112	130
DHW heating capacity	kW	65,6	72,7	85,0	94,4	108	131	145	169
Power input	kW	15,8	17,7	20,2	22,7	25,4	31,5	35,3	40,4
Total COP		7,37	7,25	7,47	7,36	7,53	7,39	7,26	7,41
User side water flow rate	l/h	8734	9635	11354	12568	14420	17500	19256	22499
User side water pressure drops	kPa	28	33	33	40	33	37	44	43
DHW side water flow rate	l/h	11335	12548	14680	16294	18621	22704	25082	29172
DHW side water pressure drops	kPa	45	54	53	65	54	60	72	70
Heating mode or DHW (3)									
Heating capacity (E)	kW	56,6	62,4	73,3	81,3	89,8	112	124	148
Power input (E)	kW	16,3	18,2	21,2	23,7	26,5	32,5	36,2	45,3
COP (E)		3,48	3,43	3,46	3,43	3,39	3,45	3,42	3,26
Eurovent efficiency class		A	A	A	A	A	A	A	A
User side water flow rate	l/h	9776	10784	12668	14037	15534	19368	21389	25540
User side water pressure drops (E)	kPa	34	41	41	50	39	45	54	55
General data									
Maximum current absorption	A	41	44	51	55	66	81	87	96
Startup current	A	159	162	185	183	191	194	198	220
Startup current with softstarter kit	A	104	105	121	119	124	126	129	143
No. of compressors / circuits		2/2	2/2	2/2	2/2	2/2	4/2	4/2	4/2
Buffer tank volume	dm^3	200	200	220	220	220	340	340	600
Expansion vessel	dm^3	8	8	8	8	8	8	8	24
Sound power level (4) (E)	dB(A)	80	80	81	81	81	82	82	84
Transport weight unit with pump and tank	kg	882	690	800	810	850	1190	1210	1530
Operating weight unit with pump and full tank	kg	1082	1082	1082	1082	1082	1082	1082	1082

(1) Water temperature 12 / 7 °C, outdoor air temperature 35 °C (UNI EN 14511:2011)
(2) Water temperature 12 / 7 °C, recovery water temperature 40 / 45 °C
(3) Water temperature 40 / 45 °C, outdoor air temperature 7 °C D.B. / 6 °C W.B. (UNI EN 14511:2011)
(4) Sound power level measured according to UNI EN ISO 9614
(E) EUROVENT certified data

Rated technical data of models for 2-pipe systems + DHW

LCP MS		144	164	194	214	244	274	294	324
Power supply	V-ph-Hz	400-3N-50							
Cooling mode (1)									
Cooling capacity (E)	kW	147	166	193	220	237	263	298	313
Power input (E)	kW	49,2	55,6	67,1	75,6	84,3	92,4	103	117
EER (E)		2,99	2,98	2,87	2,90	2,81	2,85	2,89	2,68
ESEER (E)		3,88	4,01	4,12	4,19	4,01	3,93	3,95	3,83
Eurovent efficiency class		B	B	C	B	C	C	C	D
User side water flow	l/h	25411	28617	33237	37885	40949	45370	51321	53968
Water pressure drop (E)	kPa	54	49	46	59	58	39	48	63
Cooling mode + DHW (2)									
Cooling capacity	kW	144	164	197	221	245	268	303	325
DHW heating capacity	kW	188	213	254	288	318	347	393	426
Power input	kW	45,6	51,3	60,2	70,4	77,0	83,6	94,6	106
Total COP		7,27	7,36	7,49	7,24	7,31	7,36	7,37	7,08
User side water flow rate	l/h	24877	28350	33958	38164	42199	46159	52292	56090
User side water pressure drops	kPa	52	48	48	60	61	40	49	67
DHW side water flow rate	l/h	32371	36806	43914	49724	54844	60025	67893	73463
DHW side water pressure drops	kPa	86	79	78	98	98	79	98	113
Heating mode or DHW (3)									
Heating capacity (E)	kW	164	182	212	248	268	296	333	343
Power input (E)	kW	50,4	56,2	64,8	74,7	80,1	88,7	99,2	110
COP (E)		3,24	3,23	3,28	3,32	3,35	3,34	3,35	3,11
Eurovent efficiency class		A	A	A	A	A	A	A	B
User side water flow rate	l/h	28269	31445	36720	42793	46342	51196	57519	59230
User side water pressure drops (E)	kPa	67	59	56	75	72	60	73	76
General data									
Maximum current absorption	A	105	126	148	167	190	215	229	242
Startup current	A	222	241	307	318	382	398	464	472
Startup current with softstarter kit	A	145	157	200	207	248	259	301	307
No. of compressors / circuits		4/2	4/2	4/2	4/2	4/2	4/2	4/2	4/2
Buffer tank volume	dm^3	600	600	600	600	600	765	765	765
Expansion vessel	dm^3	24	24	24	24	24	24	24	24
Sound power level (4) (E)	dB(A)	84	85	85	86	86	86	87	87
Transport weight unit with pump and tank	kg	1550	1690	1890	1890	1910	2260	2290	2320
Operating weight unit with pump and full tank	kg	1082	1082	1082	1082	1082	1082	1082	1082

(1) Water temperature 12 / 7 °C, outdoor air temperature 35 °C (UNI EN 14511:2011)
(2) Water temperature 12 / 7 °C, recovery water temperature 40 / 45 °C
(3) Water temperature 40 / 45 °C, outdoor air temperature 7 °C D.B. / 6 °C W.B. (UNI EN 14511:2011)
(4) Sound power level measured according to UNI EN ISO 9614
(E) EUROVENT certified data

Rated technical data of models for 2-pipe systems + DHW

LCP ML		41	51	61	71	81	94	104	124
Power supply	V-ph-Hz	400-3N-50							
Cooling mode (1)									
Cooling capacity (E)	kW	49,4	53,5	64,7	70,4	78,3	97,7	105	127
Power input (E)	kW	16,4	18,8	20,9	24,0	28,0	33,4	38,3	45,0
EER (E)		3,00	2,84	3,09	2,94	2,79	2,92	2,75	2,82
ESEER (E)		3,47	3,52	3,60	3,58	3,58	4,05	4,16	3,98
Eurovent efficiency class		B	C	B	B	C	B	C	C
User side water flow	l/h	8522	9237	11172	12153	13513	16855	18189	21904
Water pressure drop (E)	kPa	27	31	32	38	30	34	39	41
Cooling mode + DHW (2)									
Cooling capacity	kW	50,6	55,8	65,8	72,8	83,6	101	112	130
DHW heating capacity	kW	65,6	72,7	85,0	94,4	108	131	145	169
Power input	kW	15,8	17,7	20,2	22,7	25,4	31,5	35,3	40,4
Total COP		7,37	7,25	7,47	7,36	7,53	7,39	7,26	7,41
User side water flow rate	l/h	8734	9635	11354	12568	14420	17500	19256	22499
User side water pressure drops	kPa	28	33	33	40	33	37	44	43
DHW side water flow rate	l/h	11335	12548	14680	16294	18621	22704	25082	29172
DHW side water pressure drops	kPa	45	54	53	65	54	60	72	70
Heating mode or DHW (3)									
Heating capacity (E)	kW	56,0	61,8	72,0	79,8	89,0	111	121	141
Power input (E)	kW	15,6	17,5	20,2	22,7	25,6	31,2	34,9	42,9
COP (E)		3,59	3,52	3,56	3,51	3,48	3,54	3,48	3,29
Eurovent efficiency class		A	A	A	A	A	A	A	A
User side water flow rate	l/h	9684	10682	12436	13780	15388	19097	20986	24392
User side water pressure drops (E)	kPa	34	40	40	48	38	44	52	50
General data									
Maximum current absorption	A	41	44	51	55	66	81	87	96
Startup current	A	159	162	185	183	191	194	198	220
Startup current with softstarter kit	A	104	105	121	119	124	126	129	143
No. of compressors / circuits		2/2	2/2	2/2	2/2	2/2	4/2	4/2	4/2
Buffer tank volume	dm^3	200	200	220	220	220	340	340	600
Expansion vessel	dm^3	8	8	8	8	8	8	8	24
Sound power level (4) (E)	dB(A)	73	74	76	76	76	77	77	79
Transport weight unit with pump and tank	kg	892	700	810	820	860	1210	1230	1550
Operating weight unit with pump and full tank	kg	1092	1102	1260	1270	1310	1860	1880	2425

(1) Water temperature 12 / 7 °C, outdoor air temperature 35 °C (UNI EN 14511:2011)
(2) Water temperature 12 / 7 °C, recovery water temperature 40 / 45 °C
(3) Water temperature 40 / 45 °C, outdoor air temperature 7 °C D.B. / 6 °C W.B. (UNI EN 14511:2011)
(4) Sound power level measured according to UNI EN ISO 9614
(E) EUROVENT certified data

Rated technical data of models for 2-pipe systems + DHW

LCP ML		144	164	194	214	244	274	294	324
Power supply	V-ph-Hz	400-3N-50							
Cooling mode (1)									
Cooling capacity (E)	kW	138	153	187	214	232	258	291	303
Power input (E)	kW	51,2	59,2	67,3	76,1	85,0	92,5	104	119
EER (E)		2,69	2,59	2,78	2,82	2,73	2,79	2,79	2,55
ESEER (E)		3,98	3,98	3,98	4,12	4,02	3,98	3,96	3,92
Eurovent efficiency class		D	D	C	C	C	C	C	D
User side water flow	l/h	23786	26453	32255	36969	39985	44458	50140	52308
Water pressure drop (E)	kPa	48	42	44	57	55	38	46	60
Cooling mode + DHW (2)									
Cooling capacity	kW	144	164	197	221	245	268	303	325
DHW heating capacity	kW	188	213	254	288	318	347	393	426
Power input	kW	45,6	51,3	60,2	70,4	77,0	83,6	94,6	106
Total COP		7,27	7,36	7,49	7,24	7,31	7,36	7,37	7,08
User side water flow rate	l/h	24877	28350	33958	38164	42199	46159	52292	56090
User side water pressure drops	kPa	52	48	48	60	61	40	49	67
DHW side water flow rate	l/h	32371	36806	43914	49724	54844	60025	67893	73463
DHW side water pressure drops	kPa	86	79	78	98	98	79	98	113
Heating mode or DHW (3)									
Heating capacity (E)	kW	156	179	211	247	268	295	333	343
Power input (E)	kW	48,0	54,0	62,5	72,1	77,8	86,4	96,9	108
COP (E)		3,26	3,30	3,38	3,42	3,45	3,41	3,43	3,17
Eurovent efficiency class		A	A	A	A	A	A	A	B
User side water flow rate	l/h	27027	30857	36549	42640	46342	50963	57519	59230
User side water pressure drops (E)	kPa	62	57	56	75	72	59	73	76
General data									
Maximum current absorption	A	105	126	148	167	190	215	229	242
Startup current	A	222	241	307	318	382	398	464	472
Startup current with softstarter kit	A	145	157	200	207	248	259	301	307
No. of compressors / circuits		4/2	4/2	4/2	4/2	4/2	4/2	4/2	4/2
Buffer tank volume	dm^3	600	600	600	600	600	765	765	765
Expansion vessel	dm^3	24	24	24	24	24	24	24	24
Sound power level (4) (E)	dB(A)	79	80	81	82	82	83	83	83
Transport weight unit with pump and tank	kg	1570	1710	1920	1920	1940	2290	2320	2350
Operating weight unit with pump and full tank	kg	2445	2585	2828	2828	2890	3405	3435	3465

(1) Water temperature 12 / 7 °C, outdoor air temperature 35 °C (UNI EN 14511:2011)
(2) Water temperature 12 / 7 °C, recovery water temperature 40 / 45 °C
(3) Water temperature 40 / 45 °C, outdoor air temperature 7 °C D.B. / 6 °C W.B. (UNI EN 14511:2011)
(4) Sound power level measured according to UNI EN ISO 9614
(E) EUROVENT certified data

Rated technical data of models for 4-pipe systems

LCP PS		41	51	61	71	81	94	104	124
Power supply	V-ph-Hz	400-3N-50							
Cooling mode (1)									
Cooling capacity (E)	kW	51,4	56,2	67,3	73,8	82,5	102	111	134
Power input (E)	kW	16,2	18,3	20,8	23,4	27,0	32,8	37,0	44,1
EER (E)		3,18	3,08	3,24	3,15	3,05	3,11	3,00	3,04
ESEER (E)		3,58	3,67	3,69	3,72	3,74	4,14	4,29	3,82
Eurovent efficiency class		A	B	A	A	B	A	B	B
User side water flow	l/h	8874	9695	11616	12743	14227	17571	19157	23115
Water pressure drop (E)	kPa	29	34	34	41	32	37	43	45
Cooling and heating mode in total heat recovery (2)									
Cooling capacity	kW	50,6	55,8	65,8	72,8	83,6	101	112	130
Heating capacity	kW	65,6	72,7	85,0	94,4	108	131	145	169
Power input	kW	15,8	17,7	20,2	22,7	25,4	31,5	35,3	40,4
Total COP		7,37	7,25	7,47	7,36	7,53	7,39	7,26	7,41
Cooling side water flow rate	l/h	8734	9635	11354	12568	14420	17500	19256	22499
Cooling side water pressure drops	kPa	28	33	33	40	33	37	44	43
Heating side water flow rate	l/h	11335	12548	14680	16294	18621	22704	25082	29172
Heating side water pressure drops	kPa	45	54	53	65	54	60	72	70
Heating mode (3)									
Heating capacity (E)	kW	56,6	62,4	73,3	81,3	89,8	112	124	148
Power input (E)	kW	16,3	18,2	21,2	23,7	26,5	32,5	36,2	45,3
COP (E)		3,48	3,43	3,46	3,43	3,39	3,45	3,42	3,26
Eurovent efficiency class		A	A	A	A	A	A	A	A
User side water flow rate	l/h	9776	10784	12668	14037	15534	19368	21389	25540
User side water pressure drops (E)	kPa	34	41	41	50	39	45	54	55
General data									
Maximum current absorption	A	41	44	51	55	66	81	87	96
Startup current	A	159	162	185	183	191	194	198	220
Startup current with softstarter kit	A	104	105	121	119	124	126	129	143
No. of compressors / circuits		2/2	2/2	2/2	2/2	2/2	4/2	4/2	4/2
Buffer tank volume	dm^3	200	200	220	220	220	340	340	600
Expansion vessel	dm^3	8	8	8	8	8	8	8	24
Sound power level (4) (E)	dB(A)	80	80	81	81	81	82	82	84
Transport weight unit with pump and tank	kg	882	892	1030	1040	1080	1500	1520	1805
Operating weight unit with pump and full tank	kg	1082	1092	1250	1260	1300	1840	1860	2405

(1) Water temperature 12 / 7 °C, outdoor air temperature 35 °C (UNI EN 14511:2011)
(2) Water temperature 12 / 7 °C, recovery water temperature 40 / 45 °C
(3) Water temperature 40 / 45 °C, outdoor air temperature 7 °C D.B. / 6 °C W.B. (UNI EN 14511:2011)
(4) Sound power level measured according to UNI EN ISO 9614
(E) EUROVENT certified data

Rated technical data of models for 4-pipe systems

LCP PS		144	164	194	214	244	274	294	324
Power supply	V-ph-Hz	400-3N-50							
Cooling mode (1)									
Cooling capacity (E)	kW	147	166	193	220	237	263	298	313
Power input (E)	kW	49,2	55,6	67,1	75,6	84,3	92,4	103	117
EER (E)		2,99	2,98	2,87	2,90	2,81	2,85	2,89	2,68
ESEER (E)		3,88	4,01	4,12	4,19	4,01	3,93	3,95	3,83
Eurovent efficiency class		B	B	C	B	C	C	C	D
User side water flow	l/h	25411	28617	33237	37885	40949	45370	51321	53968
Water pressure drop (E)	kPa	54	49	46	59	58	39	48	63
Cooling and heating mode in total heat recovery (2)									
Cooling capacity	kW	144	164	197	221	245	268	303	325
Heating capacity	kW	188	213	254	288	318	347	393	426
Power input	kW	45,6	51,3	60,2	70,4	77,0	83,6	94,6	106
Total COP		7,27	7,36	7,49	7,24	7,31	7,36	7,37	7,08
Cooling side water flow rate	l/h	24877	28350	33958	38164	42199	46159	52292	56090
Cooling side water pressure drops	kPa	52	48	48	60	61	40	49	67
Heating side water flow rate	l/h	32371	36806	43914	49724	54844	60025	67893	73463
Heating side water pressure drops	kPa	86	79	78	98	98	79	98	113
Heating mode (3)									
Heating capacity (E)	kW	164	182	212	248	268	296	333	343
Power input (E)	kW	50,4	56,2	64,8	74,7	80,1	88,7	99,2	110
COP (E)		3,24	3,23	3,28	3,32	3,35	3,34	3,35	3,11
Eurovent efficiency class		A	A	A	A	A	A	A	B
User side water flow rate	l/h	28269	31445	36720	42793	46342	51196	57519	59230
User side water pressure drops (E)	kPa	67	59	56	75	72	60	73	76
General data									
Maximum current absorption	A	105	126	148	167	190	215	229	242
Startup current	A	222	241	307	318	382	398	464	472
Startup current with softstarter kit	A	145	157	200	207	248	259	301	307
No. of compressors / circuits		4/2	4/2	4/2	4/2	4/2	4/2	4/2	4/2
Buffer tank volume	dm^3	600	600	600	600	600	765	765	765
Expansion vessel	dm^3	24	24	24	24	24	24	24	24
Sound power level (4) (E)	dB(A)	84	85	85	86	86	86	87	87
Transport weight unit with pump and tank	kg	1825	1965	2198	2198	2260	2610	2640	2670
Operating weight unit with pump and full tank	kg	2425	2565	2798	2798	2860	3375	3405	3435

(1) Water temperature 12 / 7 °C, outdoor air temperature 35 °C (UNI EN 14511:2011)
(2) Water temperature 12 / 7 °C, recovery water temperature 40 / 45 °C
(3) Water temperature 40 / 45 °C, outdoor air temperature 7 °C D.B. / 6 °C W.B. (UNI EN 14511:2011)
(4) Sound power level measured according to UNI EN ISO 9614
(E) EUROVENT certified data

Rated technical data of models for 4-pipe systems

LCP PL		41	51	61	71	81	94	104	124
Power supply	V-ph-Hz	400-3N-50							
Cooling mode (1)									
Cooling capacity (E)	kW	49,4	53,5	64,7	70,4	78,3	97,7	105	127
Power input (E)	kW	16,4	18,8	20,9	24,0	28,0	33,4	38,3	45,0
EER (E)		3,00	2,84	3,09	2,94	2,79	2,92	2,75	2,82
ESEER (E)		3,47	3,52	3,60	3,58	3,58	4,05	4,16	3,98
Eurovent efficiency class		B	C	B	B	C	B	C	C
User side water flow	l/h	8522	9237	11172	12153	13513	16855	18189	21904
Water pressure drop (E)	kPa	27	31	32	38	30	34	39	41
Cooling and heating mode in total heat recovery (2)									
Cooling capacity	kW	50,6	55,8	65,8	72,8	83,6	101	112	130
Heating capacity	kW	65,6	72,7	85,0	94,4	108	131	145	169
Power input	kW	16,4	18,8	20,9	24,0	28,0	33,4	38,3	45,0
Total COP		7,37	7,25	7,47	7,36	7,53	7,39	7,26	7,41
Cooling side water flow rate	l/h	8734	9635	11354	12568	14420	17500	19256	22499
Cooling side water pressure drops	kPa	28	33	33	40	33	37	44	43
Heating side water flow rate	l/h	11335	12548	14680	16294	18621	22704	25082	29172
Heating side water pressure drops	kPa	45	54	53	65	54	60	72	70
Heating mode (3)									
Heating capacity (E)	kW	56,0	61,8	72,0	79,8	89,0	111	121	141
Power input (E)	kW	15,6	17,5	20,2	22,7	25,6	31,2	34,9	42,9
COP (E)		3,59	3,52	3,56	3,51	3,48	3,54	3,48	3,29
Eurovent efficiency class		A	A	A	A	A	A	A	A
User side water flow rate	l/h	9684	10682	12436	13780	15388	19097	20986	24392
User side water pressure drops (E)	kPa	34	40	40	48	38	44	52	50
General data									
Maximum current absorption	A	41	44	51	55	66	81	87	96
Startup current	A	159	162	185	183	191	194	198	220
Startup current with softstarter kit	A	104	105	121	119	124	126	129	143
No. of compressors / circuits		2/2	2/2	2/2	2/2	2/2	4/2	4/2	4/2
Buffer tank volume	dm^3	200	200	220	220	220	340	340	600
Expansion vessel	dm^3	8	8	8	8	8	8	8	24
Sound power level (4) (E)	dB(A)	73	74	76	76	76	77	77	79
Transport weight unit with pump and tank	kg	892	902	1040	1050	1090	1520	1540	1825
Operating weight unit with pump and full tank	kg	1092	1102	1260	1270	1310	1860	1880	2425

(1) Water temperature 12 / 7 °C, outdoor air temperature 35 °C (UNI EN 14511:2011)
(2) Water temperature 12 / 7 °C, recovery water temperature 40 / 45 °C
(3) Water temperature 40 / 45 °C, outdoor air temperature 7 °C D.B. / 6 °C W.B. (UNI EN 14511:2011)
(4) Sound power level measured according to UNI EN ISO 9614
(E) EUROVENT certified data

Rated technical data of models for 4-pipe systems

LCP PL		144	164	194	214	244	274	294	324
Power supply	V-ph-Hz	400-3N-50							
Cooling mode (1)									
Cooling capacity (E)	kW	138	153	187	214	232	258	291	303
Power input (E)	kW	51,2	59,2	67,3	76,1	85,0	92,5	104	119
EER (E)		2,69	2,59	2,78	2,82	2,73	2,79	2,79	2,55
ESEER (E)		3,98	3,98	3,98	4,12	4,02	3,98	3,96	3,92
Eurovent efficiency class		D	D	C	C	C	C	C	D
User side water flow	l/h	23786	26453	32255	36969	39985	44458	50140	52308
Water pressure drop (E)	kPa	48	42	44	57	55	38	46	60
Cooling and heating mode in total heat recovery (2)									
Cooling capacity	kW	144	164	197	221	245	268	303	325
Heating capacity	kW	188	213	254	288	318	347	393	426
Power input	kW	51.2	59.2	67.3	76.1	85.0	92.5	104	119
Total COP		7.27	7.36	7.49	7.24	7.31	7.36	7.37	7.08
Cooling side water flow rate	l/h	24877	28350	33958	38164	42199	46159	52292	56090
Cooling side water pressure drops	kPa	52	48	48	60	61	40	49	67
Heating side water flow rate	l/h	32371	36806	43914	49724	54844	60025	67893	73463
Heating side water pressure drops	kPa	86	79	78	98	98	79	98	113
Heating mode (3)									
Heating capacity (E)	kW	156	179	211	247	268	295	333	343
Power input (E)	kW	48,0	54,0	62,5	72,1	77,8	86,4	96,9	108
COP (E)		3,26	3,30	3,38	3,42	3,45	3,41	3,43	3,17
Eurovent efficiency class		A	A	A	A	A	A	A	B
User side water flow rate	l/h	27027	30857	36549	42640	46342	50963	57519	59230
User side water pressure drops (E)	kPa	62	57	56	75	72	59	73	76
General data									
Maximum current absorption	A	105	126	148	167	190	215	229	242
Startup current	A	222	241	307	318	382	398	464	472
Startup current with softstarter kit	A	145	157	200	207	248	259	301	307
No. of compressors / circuits		4/2	4/2	4/2	4/2	4/2	4/2	4/2	4/2
Buffer tank volume	dm^3	600	600	600	600	600	765	765	765
Expansion vessel	dm^3	24	24	24	24	24	24	24	24
Sound power level (4) (E)	dB(A)	79	80	81	82	82	83	83	83
Transport weight unit with pump and tank	kg	1845	1985	2228	2228	2290	2640	2670	2700
Operating weight unit with pump and full tank	kg	2445	2585	2828	2828	2890	3405	3435	3465

(1) Water temperature 12 / 7 °C, outdoor air temperature 35 °C (UNI EN 14511:2011)
(2) Water temperature 12 / 7 °C, recovery water temperature 40 / 45 °C
(3) Water temperature 40 / 45 °C, outdoor air temperature 7 °C D.B. / 6 °C W.B. (UNI EN 14511:2011)
(4) Sound power level measured according to UNI EN ISO 9614
(E) EUROVENT certified data

Dimensional drawings

LCP 41 - 51

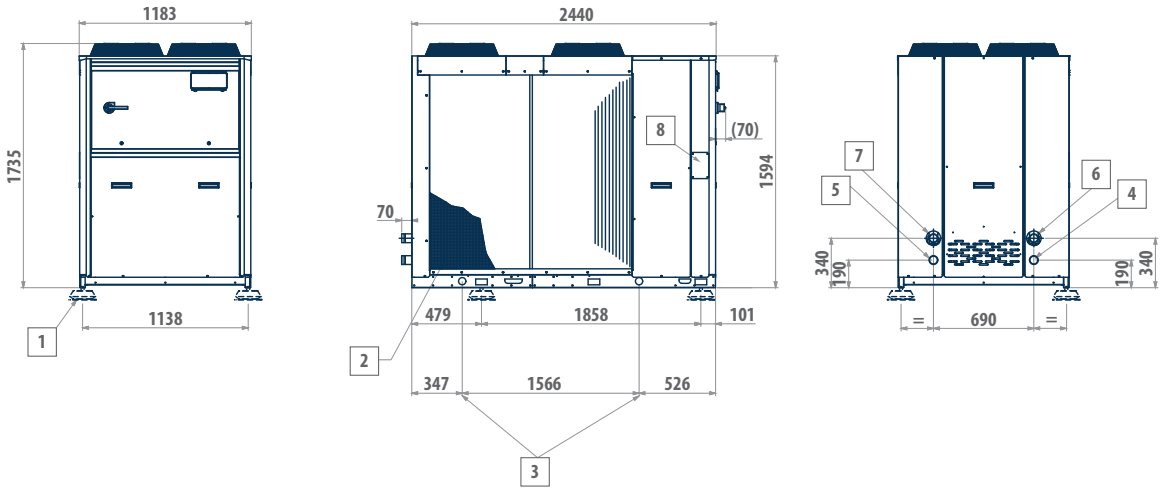

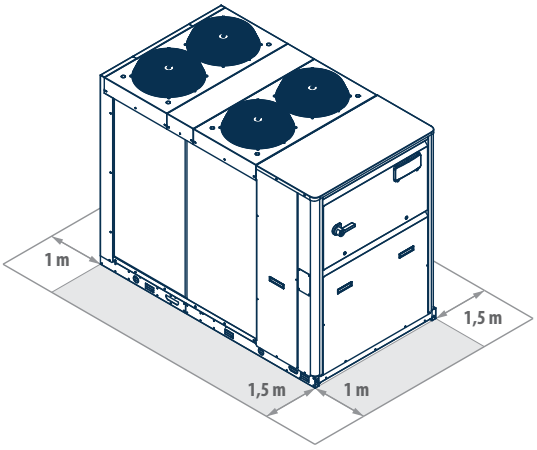

LEGEND	
1	Vibration dampers
2	Protective grille (optional)
3	Fastening points
4	Hot water inlet (Victaulic 2”)
5	Cold water inlet (Victaulic 2”)
6	Hot water outlet (Victaulic 2”)
7	Cold water outlet (Victaulic 2”)
8	Power supply input

Model	Version	
LCP 41	M-P	S-L
LCP 51	M-P	S-L

Dimensional drawings

LCP 61 - 81

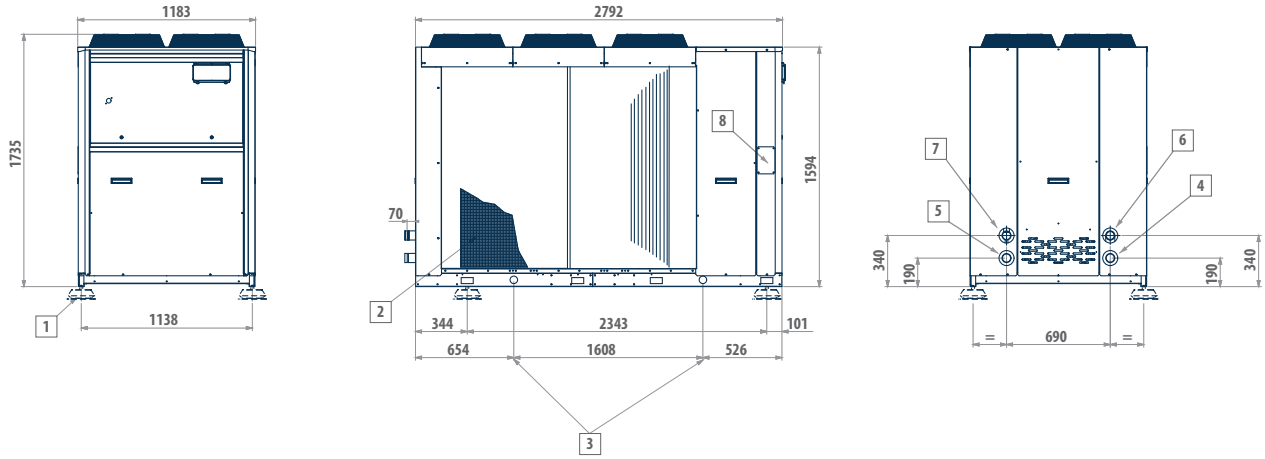

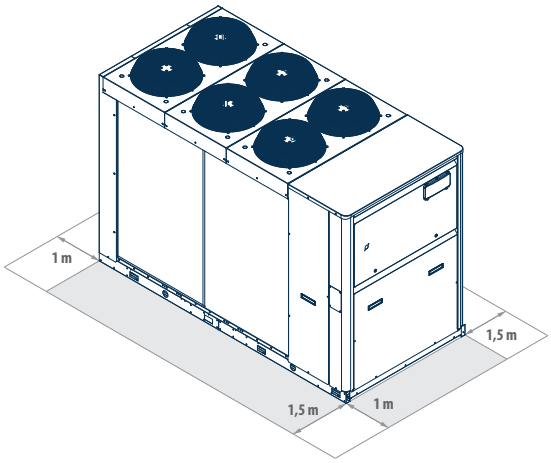

LEGEND	
1	Vibration dampers
2	Protective grille (optional)
3	Fastening points
4	Hot water inlet (Victaulic 2")
5	Cold water inlet (Victaulic 2")
6	Hot water outlet (Victaulic 2")
7	Cold water outlet (Victaulic 2")
8	Power supply input

Model	Version	
LCP 61	M-P	S-L
LCP 71	M-P	S-L
LCP 81	M-P	S-L

Dimensional drawings

LCP 94 - 104

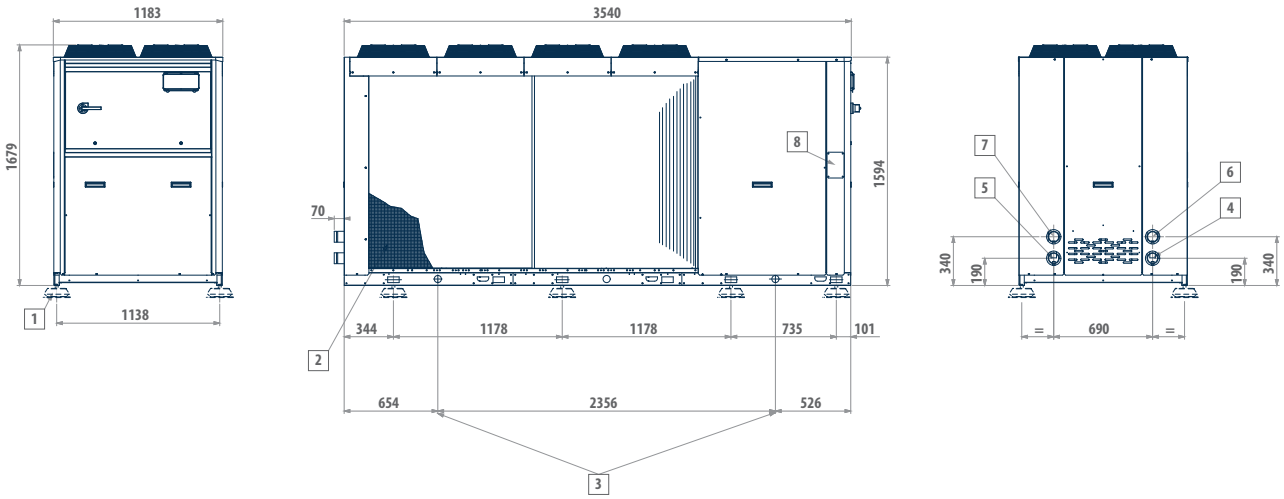

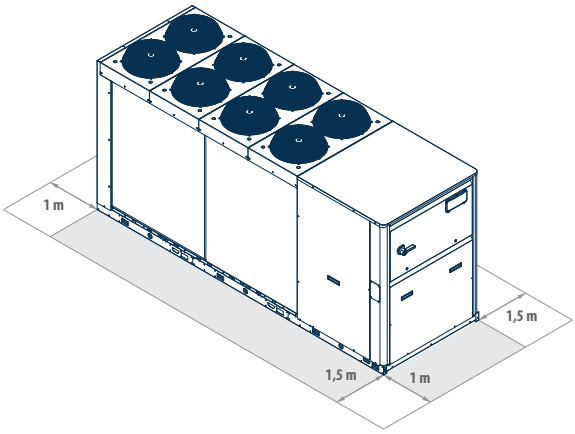

LEGEND	
1	Vibration dampers
2	Protective grille (optional)
3	Fastening points
4	Hot water inlet (Victaulic 2 ½")
5	Cold water inlet (Victaulic 2 ½")
6	Hot water outlet (Victaulic 2 ½")
7	Cold water outlet (Victaulic 2 ½")
8	Power supply input

Model	Version	
LCP 94	M-P	S-L
LCP 104	M-P	S-L

Dimensional drawings

LCP 124 - 194

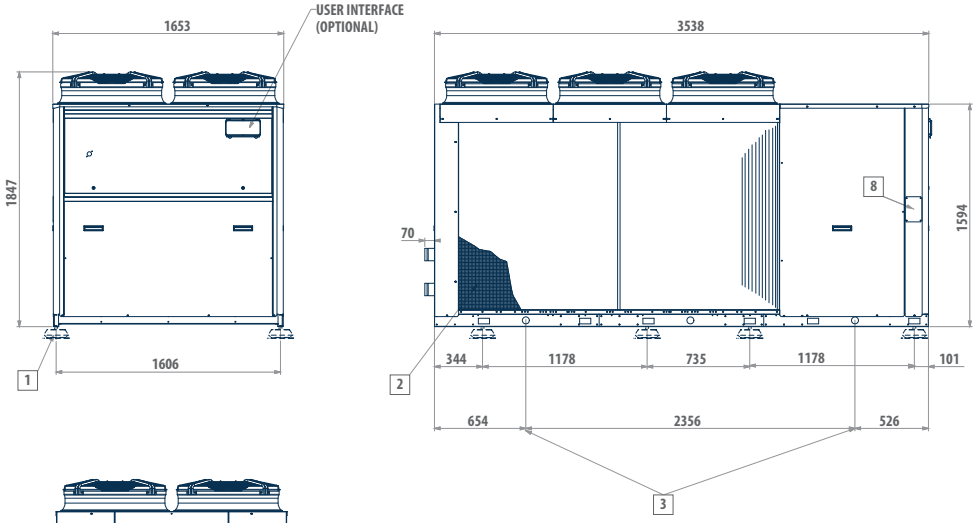

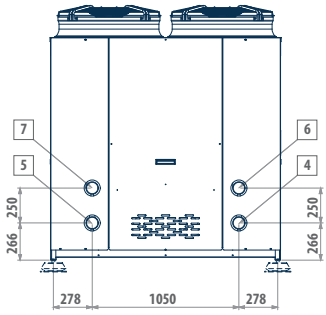

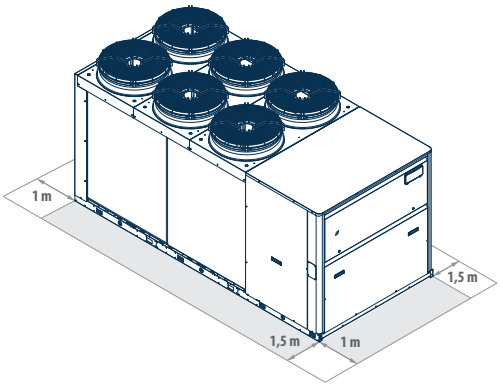

LEGEND	
1	Vibration dampers
2	Protective grille (optional)
3	Fastening points
4	Hot water inlet (Victaulic 3”)
5	Cold water inlet (Victaulic 3”)
6	Hot water outlet (Victaulic 3”)
7	Cold water outlet (Victaulic 3”)
8	Power supply input

Model	Version	
LCP 124	M-P	S-L
LCP 144	M-P	S-L
LCP 164	M-P	S-L
LCP 194	M-P	S-L

Dimensional drawings

LCP 214 - 244

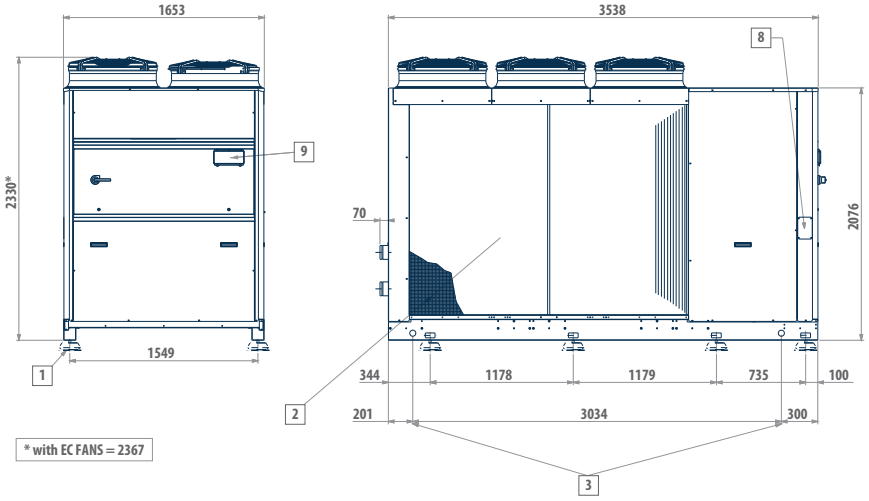

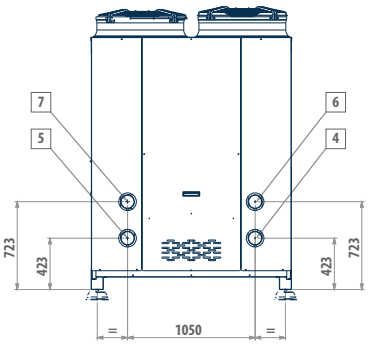

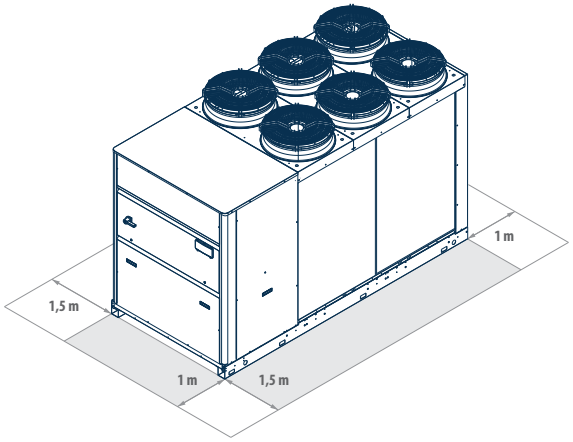

LEGEND

1	Vibration dampers
2	Protective grille (optional)
3	Fastening points
4	Hot water inlet (Victaulic 4”)
5	Cold water inlet (Victaulic 4”)
6	Hot water outlet (Victaulic 4”)
7	Cold water outlet (Victaulic 4”)
8	Power supply input
9	User interface (optional)

Model	Version	
LCP 214	M-P	S-L
LCP 244	M-P	S-L

Dimensional drawings

LCP 274 - 324

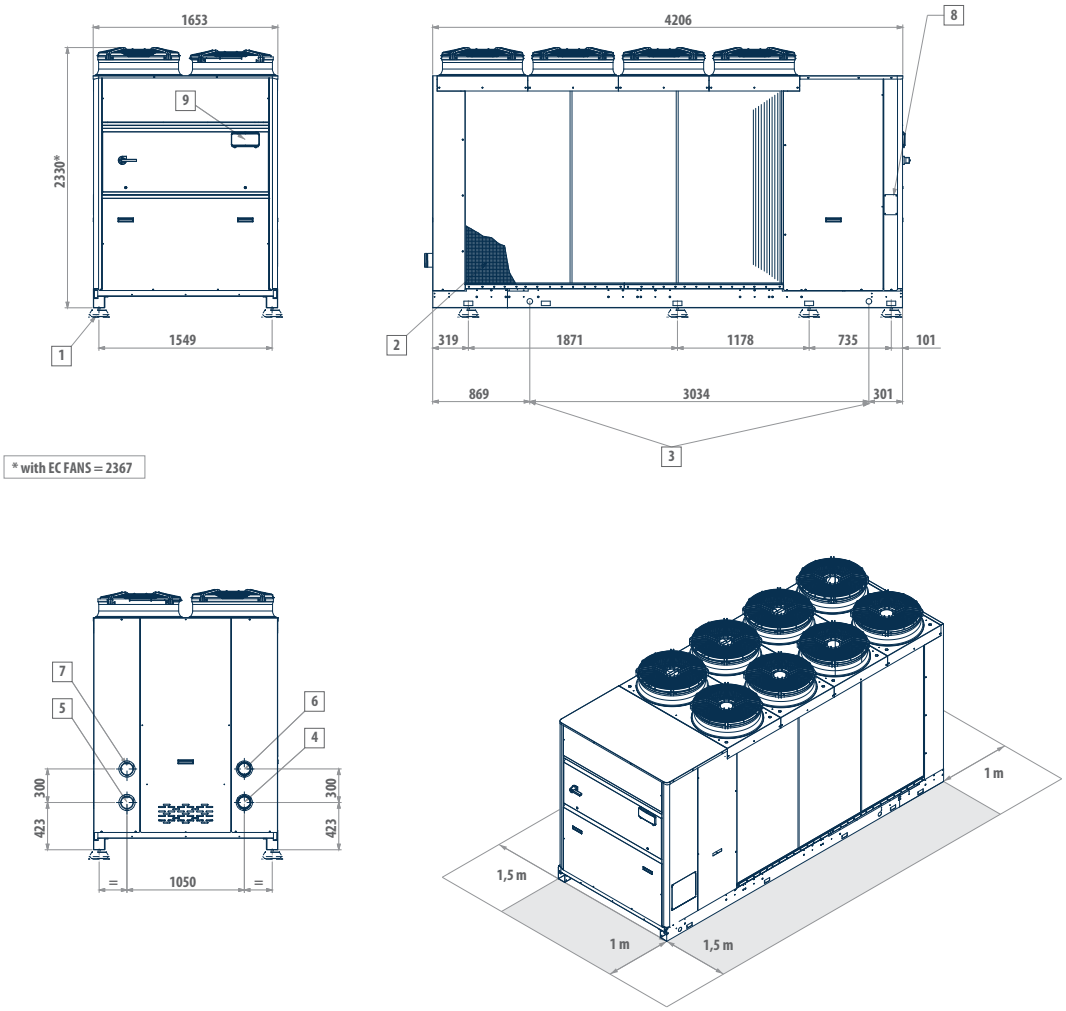

LEGEND	
1	Vibration dampers
2	Protective grille (optional)
3	Fastening points
4	Hot water inlet (Victaulic 4”)
5	Cold water inlet (Victaulic 4”)
6	Hot water outlet (Victaulic 4”)
7	Cold water outlet (Victaulic 4”)
8	Power supply input
9	User interface (optional)

Model	Version	
LCP 274	M-P	S-L
LCP 294	M-P	S-L
LCP 324	M-P	S-L